CYPRESS CREEK RENEWABLES

McLean County

- *Breezewood Solar*

Presenter: Scott Novack | Date: May 1, 2018

LOCAL SOLAR

ILLINOIS

CYPRESS CREEK RENEWABLES

OVERVIEW – CYPRESS CREEK RENEWABLES

A national leader in local solar development

ABOUT

Founded in May 2014, Cypress Creek Renewables is a developer and long-term owner/operator of solar projects located in states across the U.S.

EXPERIENCE

The Cypress Creek management team has a combined track record of developing and/or financing over 200 operational utility-scale projects throughout the U.S

DEVELOPMENT PIPELINE

Cypress Creek currently has over 5 gigawatts of local solar farms deployed or in development across 15 states. This is enough to power nearly a million homes.

Development and Operations Map

Cypress Creek has successfully developed 2.2 gigawatts of solar.

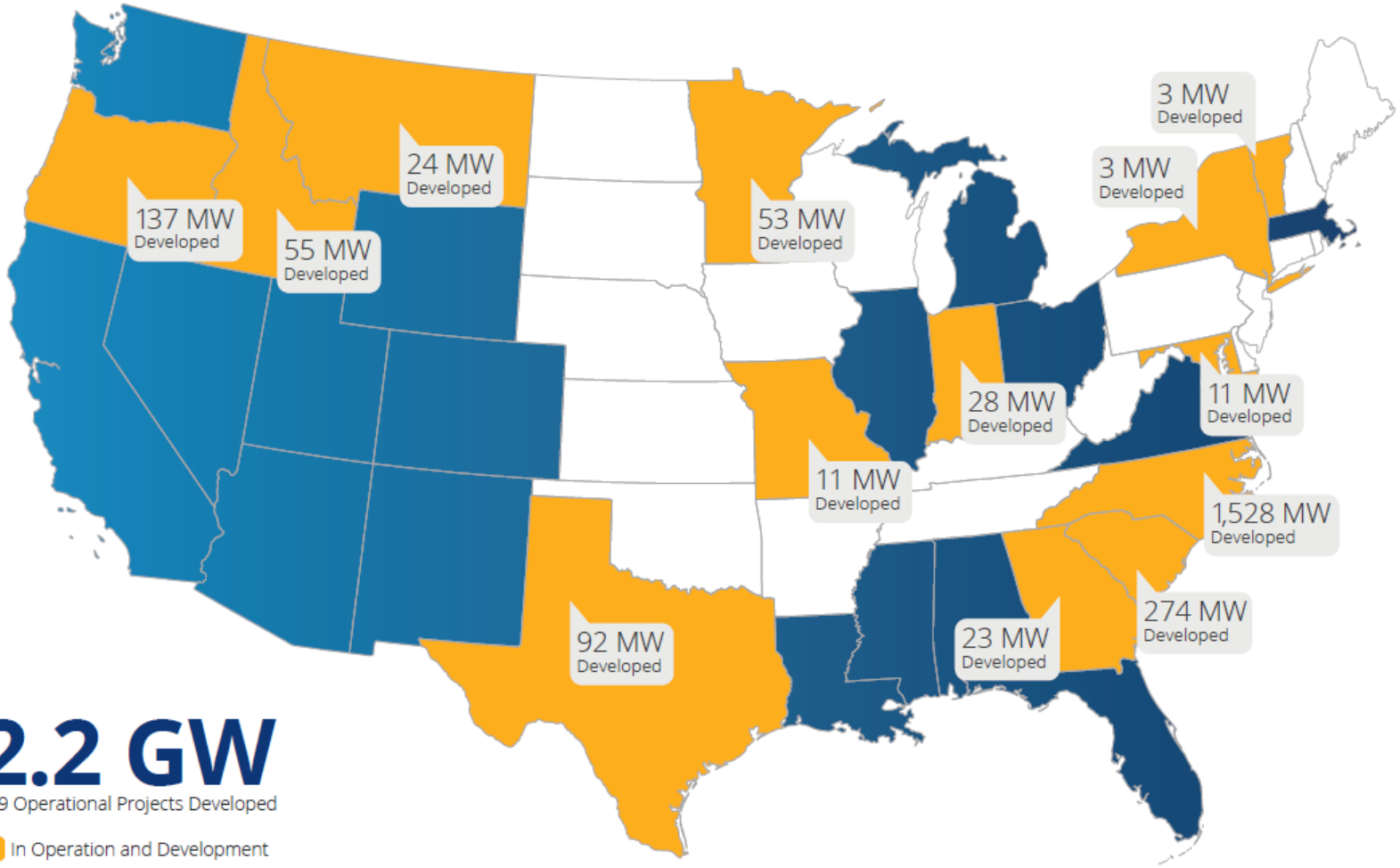

2.2 GW

249 Operational Projects Developed

In Operation and Development

In Development

Cypress Creek Renewables (CCR) has developed 2.2 gigawatts of solar across 249 projects. CCR owns and operates 1.5 GW in more than a dozen states.
Updated: December 2017

SOLAR- THE BIG PICTURE

- Solar accounts for 30% of all new electric generating capacity brought online in 2017 (second only to natural gas)
- 9% of solar jobs go to Veterans
- 53 GW of solar capacity installed in the US, enough to power over 10 million homes
- In the last decade, solar has experienced an average growth rate of 68%
- Solar PV prices have fallen by more than 70% since 2010
- U.S. PV capacity is expected to more than double over the next five years
- Illinois Future Energy Jobs Act (FEJA) becomes law solidifying demand for solar energy in IL

*Data from the U.S. Energy Information Administration, The Solar Foundation, and the U.S. Census Bureau

SOLAR BASICS– SOLAR TECHNOLOGY

CYPRESS CREEK ONLY EMPLOYS SOLAR PHOTOVOLTAIC TECHNOLOGY

SOLAR THERMAL

Sunlight in, heat out

SOLAR PHOTOVOLTAICS

Sunlight in, electricity out

SOLAR BASICS – SOLAR PANEL SCHEMATICS

Cypress Creek solar farms employ fixed-tilt and/or tracking photovoltaic (PV) systems

FIXED-TILT

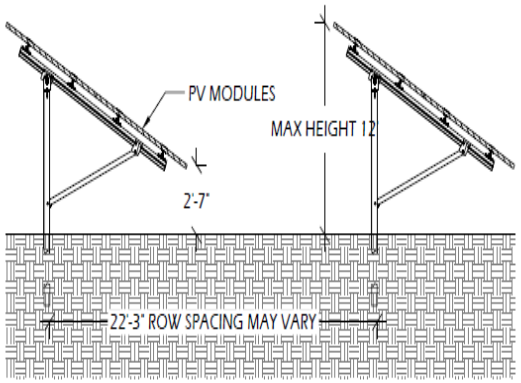

SINGLE-AXIS TRACKING

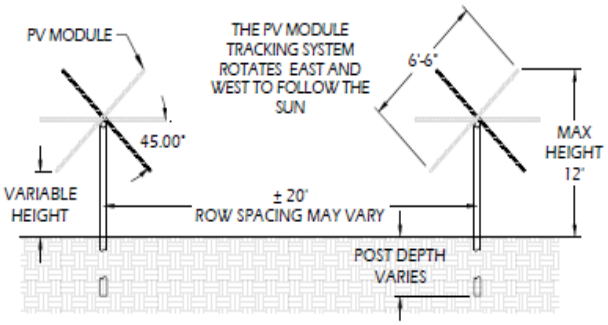

SOLAR VISUALS

PV Modules- Fixed Tilt

SOLAR VISUALS

PV Panel Wiring and Steel Posts

SOLAR VISUALS

PV Modules- Single Axis Tracking

SOLAR VISUALS

Security Fence, Access Road, PV Panels

SOLAR VISUALS- EQUIPMENT

The basic components of any ground-mounted solar PV facility:

- PV modules
- Inverters
- Transformers
- Combiner boxes
- Wires & conductor cables
- Structural racking system
- Perimeter fencing

Inverters and Transformers

SOLAR VISUALS – SITE WORK/CONSTRUCTION

Driving posts at Shoe Creek Solar, NC

Tracker Racking after Install at Walnut Springs, TX

SOLAR BASICS

AGRICULTURAL IMPACT

- Maintains permeable nature of the land due to limited concrete
- Field tiles located prior to construction, designed around, and repaired/replaced when needed
- Cover cropping with native Illinois grasses
- Agricultural land lies fallow allowing natural biological process to rejuvenate the soil

SOLAR VISUALS – Indiana Projects

Pastime Solar- City of Brazil, IN | 5 MW | 45 Acres

SOLAR VISUALS – Indiana Projects

Sullivan Solar- Sullivan, IN | 5 MW | 45 Acres

SOLAR PV TECHNOLOGY

No safety risks to the community

Engineering

- Designed by licensed engineers
- Civil, Structural, and Electrical designs
- Erosion, Stormwater, and Sediment Control

Building and Electrical Permits

- All system designs are approved by local building and electrical authorities
- National Electric Code compliant

Safety

- Perimeter fencing to prevent trespassing
- Vegetation maintained to prevent overgrowth

Operations and Maintenance

- System performance monitored remotely
- Site visits 5-9 times annually for maintenance

SOLAR PHOTOVOLTAIC TECHNOLOGY

Minimal Sound, Minimal Moving Parts

Inverters & Transformers are the only sources of noise

- The inverters convert DC electricity to AC electricity.
- They have a fan that keeps them cool during the daytime.
- At 150 feet, you cannot hear the inverters.

No noise is created when the sun is down.

SOLAR PHOTOVOLTAIC TECHNOLOGY

Not a source of strong EMFs.

Electromagnetic Fields

- Everything in nature produces electromagnetic fields.
- The inverters produce the “strongest” EMFs in a solar farm, but are many times less powerful than normal overhead power lines.

At 150 feet from the inverters, no EMFs can be detected above the earth’s magnetic field.

BENEFITS OF LOCAL SOLAR

BENEFITS FOR YOU

- Locally Generated Clean Energy for Area Homes & Businesses (Renters, too!)
- Less Commitment & Hassle Compared to Rooftop Solar
- 100% Renewable Energy for the Same Price or Less Than Current Rates

BENEFITS FOR YOUR COMMUNITY

- Quiet and Virtually Self-Sufficient
- Low-Profile & Small Size for Minimum Visibility
- ▲ Economic Growth
- ▲ Property Tax Revenue

BENEFITS FOR YOUR ENVIRONMENT

- Panels Are Zero-Emission/Non-Toxic
- Zero Long-Term Environmental Impact
- Safe for Wildlife & Birds

Breezewood Solar

BREEZEWOOD SOLAR FARM

Cypress Creek proposes to develop Breezewood Solar, a 2 MW project located at approximately 3022 Robert Street, Bloomington, IL 61704.

PROPOSED LOCATION

Parcel #: 21-21-176-002

POTENTIAL LAYOUT

Size: ~ 25 acres

SASS SOLAR- BY THE NUMBERS

- Interconnecting Utility: **Ameren**
- Capacity: **2 MW**
- Solar Area: **~15 Acres**
- Project Details
  - Service Volume: **~321 Homes**
  - Municipal Services Required: **Solar farms are passive neighbors and do not require additional county services.**
  - Total Investment: **~$3.9 Million**
  - Local Spending During Construction*: **$2.3 M**
  - Local Annual Spending*: **~$27,600**
  - Local Jobs Supported During Construction*: **25**

* Estimates based on the National Renewable Energy Laboratory's Jobs and Economic Development Impact (JEDI) model

QUESTIONS

Thank you from CCR